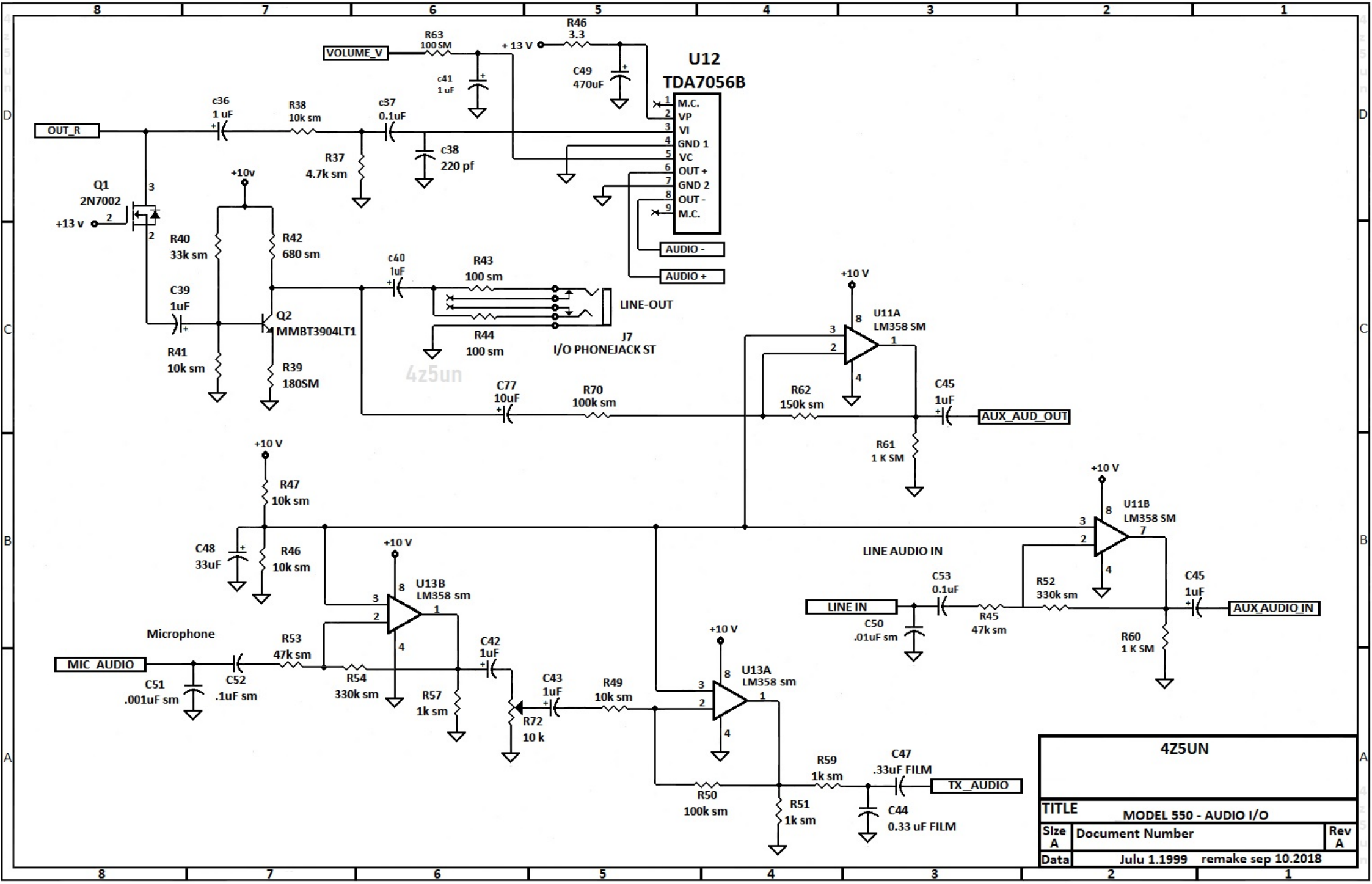
VOLUME_V
R63
100 SM
+ 13 V
R46
3.3
C49
470uF
c41
1 uF
U12
TDA7056B
M.C.
VP
VI
GND 1
VC
OUT +
GND 2
OUT -
M.C.
OUT_R
c36
1 uF
R38
10k sm
c37
0.1uF
c38
220 pf
R37
4.7k sm
Q1
2N7002
+13 v
+10v
R40
33k sm
R42
680 sm
C39
1uF
Q2
MMBT3904LT1
R41
10k sm
R39
180SM
c40
1uF
R43
100 sm
R44
100 sm
LINE-OUT
J7
I/O PHONEJACK ST
AUDIO -
AUDIO +
+10 V
U11A
LM358 SM
C77
10uF
R70
100k sm
R62
150k sm
C45
1uF
AUX_AUD_OUT
R61
1 K SM
R47
10k sm
C48
33uF
R46
10k sm
U13B
LM358 sm
Microphone
MIC_AUDIO
C51
.001uF sm
C52
.1uF sm
R53
47k sm
R54
330k sm
R57
1k sm
C42
1uF
R72
10 k
C43
1uF
R49
10k sm
U13A
LM358 sm
R50
100k sm
R51
1k sm
R59
1k sm
C47
.33uF FILM
C44
0.33 uF FILM
TX_AUDIO
U11B
LM358 SM
LINE AUDIO IN
LINE IN
C53
0.1uF
C50
.01uF sm
R45
47k sm
R52
330k sm
R60
1 K SM
C45
1uF
AUX_AUDIO_IN
4Z5UN
TITLE
MODEL 550 - AUDIO I/O
Size
A
Document Number
Rev
A
Data
Julu 1.1999 remake sep 10.2018